Cordless Precision Screwdriver
Outline Drawing

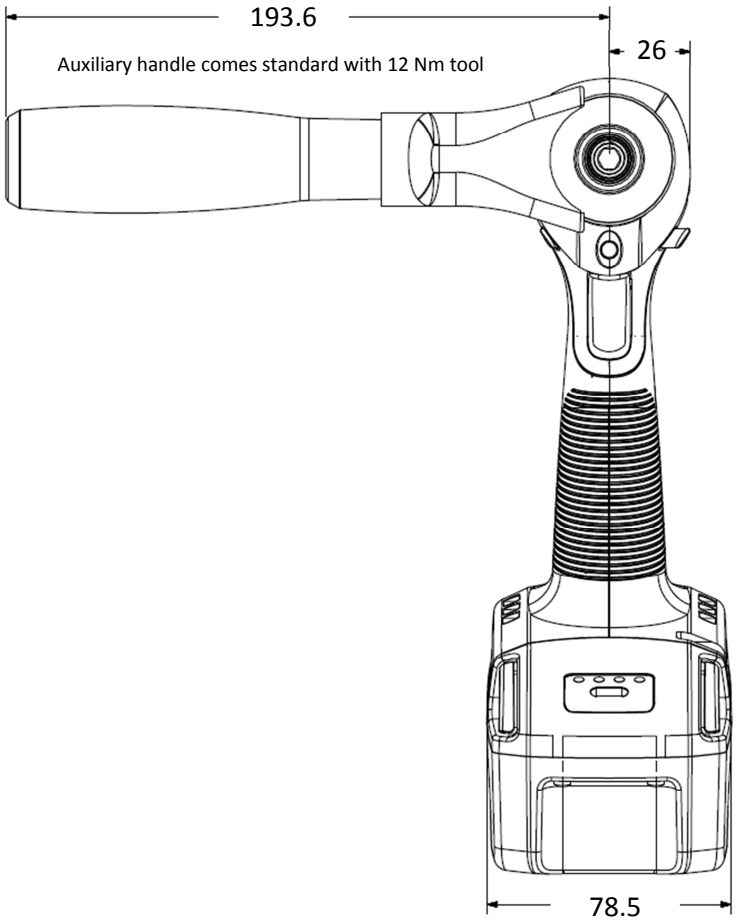

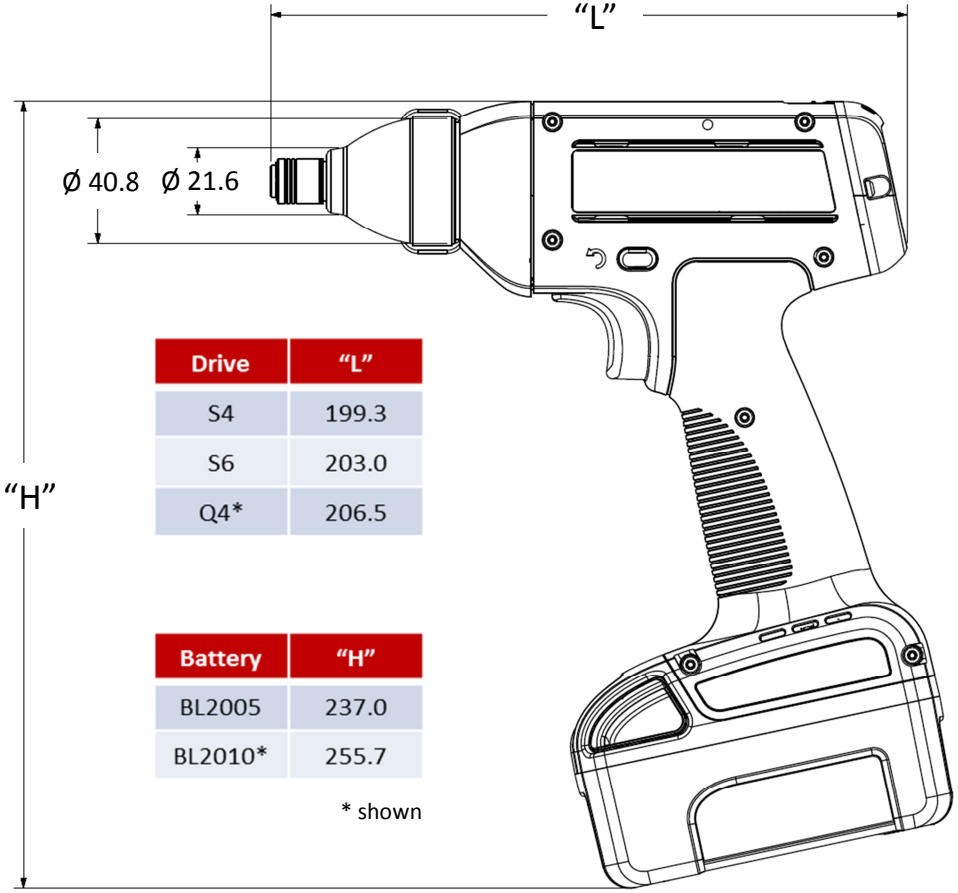

Drive	"L"
S4	199.3
S6	203.0
Q4*	206.5

Battery	"H"
BL2005	237.0
BL2010*	255.7

* shown

All dimensions in mm